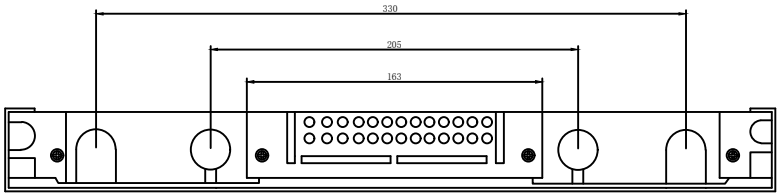

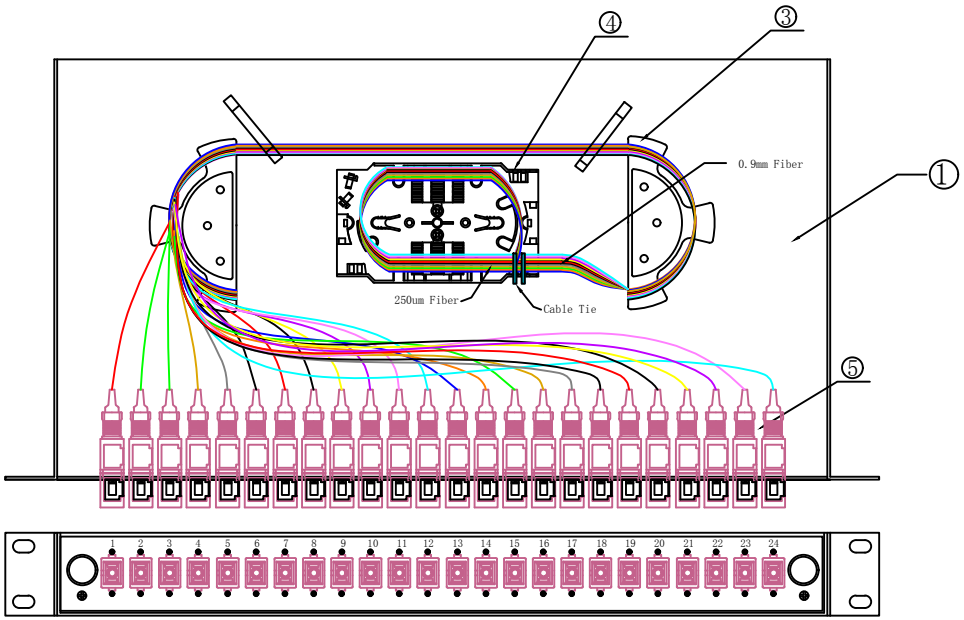

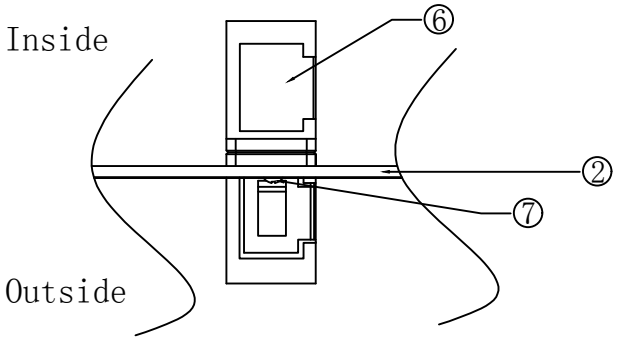

NO.:	1	2	3	4	5	6	7	8	9	10	11	12
Color:	RED	GREEN	BLUE	YELLOW	WHITE	GREY	BROWN	VIOLET	TURQUOISE	BLACK	ORANGE	PINK
NO.:	13	14	15	16	17	18	19	20	21	22	23	24
Color:	RED	GREEN	BLUE	YELLOW	WHITE	GREY	BROWN	VIOLET	TURQUOISE	BLACK	ORANGE	PINK

NOTE:

RoHS 2.0 & REACH Compliant

Accessory:

Screw and Nut M6*16mm x 4set
Cable Glands PG13.5 x 2 pcs
Fusion Splice protection sleeve(60mm*15pcs) x 2set
12 core Splicing holder 40mm,Crimping x 4 pcs

PACKING:1set/Panel Box+Label

MATERIAL LIST:

NO.	PARTS NAME	SPECIFICATION DESCRIPTION	QT'Y	REMARK
⑦	Screw	ST 2.5*6 Screw	48	
⑥	Adapter	SC Simplex Erika Viollet Adapters with flange	24	
⑤	Pigtails	12 colored SC/UPC Pigtails,50/125um,OM4	2	
④	Splice tracy	12 cores, heat schrink splicing type	2	
③	Spool	Beige	2	
②	Front panel	19″ 1U for 24 × SC Simplex Adapter vertical(RAL 7035)	1	
①	Patch Panel	19″ 1U without Front panel with Cable inputs panel Drawable Type(RAL 7035)	1	

							ITEM NO.	SPBOX 24G50 OM4 SC	
					PRODUCT NAME	19 " 1U fully loaded fiber optic patch panel Grey with front panel of SC/UPC 12*colored pigtails OM4 50/125um		UNIT	mm
		NEW	2021-10-19	A	DRAWNBY	CHECKBY	APPOBY	DATE	
BY	CHK	REVISION RECORD MODIFICATIONS	DATE	REV.	Hasia	Fan		2021-10-19	